Wireless 3-Axis Magnetic Field Sensor (PS-3221)

Introduction

The Wireless 3-Axis Magnetic Field Sensor is a combination wireless *and* USB sensor that connects to a computer or tablet device through Bluetooth, and can also connect to a computer with an included USB cable. The sensor measures the X, Y, and Z components of the magnetic flux density in tesla, millitesla, and gauss. The arrangement of the X, Y, and Z components is shown on the top label.

The two magnetic field sensing elements are located in the end of the probe. One sensing element is a three-axis ±50 gauss (G) sensor located under the dot on the probe. The other sensing element is a three-axis ±1300 G sensor located under the dot surrounded by a ring. The bottom surface of the probe has bumps at one centimeter intervals relative to the sensing element location.

Equipment

Included equipment:

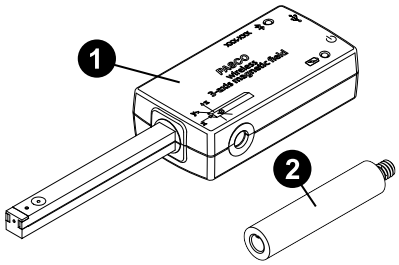

1. Wireless 3-Axis Magnetic Field Sensor
2. Sensor mounting rod
3. Micro USB cable (not pictured)

Features:

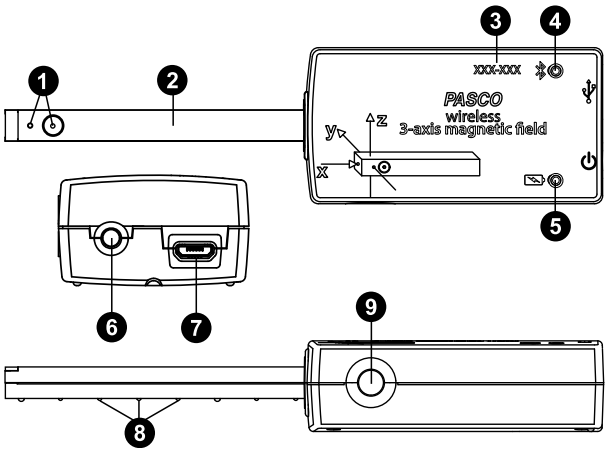

1 Sensing element indicators
Show the location of the sensing elements within the probe.

2 Probe
Contains the sensing elements used to measure magnetic flux density.

3 Device ID
Use this to identify the sensor when connecting via Bluetooth.

4 Bluetooth Status LED
Indicates the status of the sensor's Bluetooth connection.

Bluetooth LED	Status
Red blink	Ready to pair
Green blink	Connected
Yellow blink	Logging data

For information on remote data logging, see the PASCO Capstone or SPARKvue online help.

NOTE: The Bluetooth Status LED is disabled when the sensor is connected to a computer via the micro USB cable.

5 Battery Status LED
Indicates the battery level and charge status of the sensor.

Battery LED	Status
Red blink	Low power
Yellow ON	Charging
Green ON	Fully charged

6 ON/OFF button
Press to turn the sensor on. Press and hold to turn the sensor off. To preserve battery, the sensor turns itself off after several minutes of inactivity if not connected.

7 Micro USB port
Use with the included micro USB cable (not pictured) to connect the sensor to a USB charger. The port and cable can also be used to directly connect the sensor to a computer without the use of Bluetooth. This connection method is not supported by iOS.

8 Bumps at 1 cm intervals
Used to indicate distances.

9 Threaded hole (1/4-20)
Used to mount the sensor to the included mounting rod.

Required item:

- PASCO Capstone or SPARKvue data collection software

Recommended items:

- Wireless Rotary Motion Sensor (PS-3220)
- Air Core Solenoid (SE-7585)
- Ampere's Law Accessory (EM-6720)
- Helmholtz Coils (EM-6722)
- Zero Gauss Chamber (EM-8652)
- Variable Gap Magnet (EM-8618)
- Bar magnets, such as SF-7263
- Coil and cores set, such as SF-8617

Using the sensor

The sensor is designed to work with PASCO data collection software (PASCO Capstone and SPARKvue) to measure magnetic field strength.

In the software, start data collection to begin recording magnetic field strength along all three axes in units of gauss (G). Position the sensing elements, marked by the dots on the end of the probe, at the location to be measured and orient the sensor with the field lines. Magnetic field lines entering the dots on the probe result in a positive reading.

Charge the battery

Charge the battery by connecting the micro USB port to any standard USB charger. The Battery Status LED is solid yellow while charging. When fully charged, the LED changes to solid green.

Get the software

You can use the sensor with SPARKvue or PASCO Capstone software. If you're not sure which to use, visit pasco.com/products/guides/software-comparison.

SPARKvue is available as a free app for Chromebook, iOS, and Android devices. We offer a free trial of SPARKvue and Capstone for Windows and Mac. To get the software, go to pasco.com/downloads or search for **SPARKvue** in your device's app store.

If you have installed the software previously, check that you have the latest update:

SPARKvue

Go to Main Menu > **Check for Updates**

PASCO Capstone

Go to **Help** > **Check for Updates**.

Check for a firmware update

SPARKvue

1. Press the power button until the lights turn on.
2. Open SPARKvue.
3. Select **Sensor Data** on the Welcome Screen.

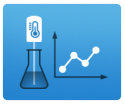

4. Select the sensor that matches its device ID. A notification appears if a firmware update is available. Click **Yes** to update the firmware.
5. Close SPARKvue when the update is complete.

PASCO Capstone

1. Press and hold the power button until the lights turn on.
2. Open PASCO Capstone.
3. Click **Hardware Setup**.

4. Select the sensor that matches its device ID. A notification appears if a firmware update is available. Click **Yes** to update the firmware.
5. Close Capstone when the update is complete.

Set up the software

SPARKvue

Connecting the sensor to a tablet or computer via Bluetooth:

1. Turn on the Wireless Magnetic Field Sensor. Check to make sure the Bluetooth Status LED is blinking red.
2. Open SPARKvue, then click **Sensor Data**.
3. From the list of available wireless devices on the left, select the device which matches the device ID printed on your Magnetic Field Sensor.

Connecting the sensor to a computer via micro USB cable:

1. Turn on the Wireless Magnetic Field Sensor.
2. Open SPARKvue, then click **Sensor Data**.
3. Connect the provided micro USB cable from the micro USB port on the sensor to a USB port or powered USB hub connected to the computer. The sensor should automatically connect to SPARKvue.

Collecting data using SPARKvue:

1. Select the measurements you intend to record from the **Select Measurements for Templates** menu by clicking the check box next to the relevant measurements' names.
2. Click **Graph** in the **Templates** section to open the Experiment Screen. The graph's axes will auto-populate with the selected measurements.
3. Click **Start** to begin recording data.

Switching range in SPARKvue:

SPARKvue uses the ±50 G sensing element by default. Follow these steps to switch to the ±1300 G sensing element if desired.

1. From the Experiment Screen, click the Live Data Bar for one of the sensor measurements and select **Configure Sensor**.
2. From the **Edit Sensor Properties** menu, click the box next to **Range** and select **±1300G**.
3. Click **OK** to return to the Experiment Screen.

PASCO Capstone

Connecting the sensor to a computer via Bluetooth:

1. Turn on the Wireless Magnetic Field Sensor. Check to make sure the Bluetooth Status LED is blinking red.
2. Open Capstone, then click **Hardware Setup** in the **Tools** palette.
3. From the list of **Available Wireless Devices**, click the device which matches the device ID printed on your Magnetic Field Sensor.

Connecting the sensor to a computer via micro USB cable:

1. Turn on the Wireless Magnetic Field Sensor.
2. Open Capstone. If desired, open **Hardware Setup** to check the connection status of the sensor.
3. Connect the provided micro USB cable from the micro USB port on the sensor to a USB port or powered USB hub connected to the computer. The sensor should automatically connect to Capstone.

Switching range in Capstone:

Capstone uses the ±50 G sensing element by default. Follow these steps to switch to the ±1300 G sensing element if desired.

1. From the **Hardware Setup** tool, click the **Properties** icon next to the Wireless Magnetic Field Sensor's name.
2. Click the box next to **Range Settings** and select **±1300G** from the dropdown list.
3. Click **OK**.

Collecting data using Capstone:

1. Double-click the **Graph** icon in the **Displays** palette to create a new blank graph display.
2. To assign measurements to the graph's axes, click each **<Select Measurement>** and select an appropriate measurement from the list.
3. Click **Record** to begin collecting data.

Troubleshooting

- If the sensor loses Bluetooth connection and will not reconnect, try cycling the ON button. Press and briefly **hold** the button until the LEDs blink in sequence, then release the button. Start the sensor in the usual way.
- If the sensor stops communicating with the computer software or tablet application, try restarting the software or application. If the problem persists, press and **hold** the ON button for 10 seconds, then release and start the sensor in the usual way.
- If the previous steps do not fix a connection problem, turn Bluetooth off and then back on for your computer or tablet, then retry.

About the battery

The sensor's battery is partially charged at the factory. If the Battery Status LED blinks red, use the micro USB cable to connect the sensor to a USB port or USB charger.

Maximizing battery life

Two factors that affect battery life are the storage temperature and the number of charge cycles. Therefore, to maximize battery life, avoid storing the sensor in very cold or very hot environments, and disconnect the sensor from its charger once it has been fully charged.

Software help

The SPARKvue and PASCO Capstone Help provide additional information on how to use this product with the software. You can access the help within the software or online.

SPARKvue

Software: Main Menu > Help

Online: help.pasco.com/sparkvue

PASCO Capstone

Software: Help > PASCO Capstone Help

Online: help.pasco.com/capstone

Specifications and accessories

Visit the product page at pasco.com/product/PS-3221 to view the specifications and explore accessories. You can also download experiment files and support documents from the product page.

Experiment files

Download one of several student-ready activities from the PASCO Experiment Library. Experiments include editable student handouts and teacher notes. Visit pasco.com/freelabs/PS-3221.

Technical support

Need more help? Our knowledgeable and friendly Technical Support staff is ready to answer your questions or walk you through any issues.

Chat	pasco.com
Phone	1-800-772-8700 x1004 (USA) +1 916 462 8384 (outside USA)
Email	support@pasco.com

Replacement parts

For information about possible replacement parts, contact Technical Support.

Regulatory information

Limited warranty

For a description of the product warranty, see the Warranty and Returns page at www.pasco.com/legal.

Copyright

This document is copyrighted with all rights reserved. Permission is granted to non-profit educational institutions for reproduction of any part of this manual, providing the reproductions are used only in their laboratories and classrooms, and are not sold for profit. Reproduction under any other circumstances, without the written consent of PASCO scientific, is prohibited.

Trademarks

PASCO and PASCO scientific are trademarks or registered trademarks of PASCO scientific, in the United States and in other countries. All other brands, products, or service names are or may be trademarks or service marks of, and are used to identify, products or services of, their respective owners. For more information visit www.pasco.com/legal.

Product end-of-life disposal

This electronic product is subject to disposal and recycling regulations that vary by country and region. It is your responsibility to recycle your electronic equipment per your local environmental laws and regulations to ensure that it will be recycled in a manner that protects human health and the environment. To find out where you can drop off your waste equipment for recycling, please contact your local waste recycle or disposal service, or the place where you purchased the product. The European Union WEEE (Waste Electronic and Electrical Equipment) symbol on the product or its packaging indicates that this product must not be disposed of in a standard waste container.

CE statement

This device has been tested and found to comply with the essential requirements and other relevant provisions of the applicable EU Directives.

FCC statement

This device complies with part 15 of the FCC Rules.
Operation is subject to the following two conditions:
(1) This device may not cause harmful interference, and (2) this device must accept any interference received, including interference that may cause undesired operation.

Battery disposal

Batteries contain chemicals that, if released, may affect the environment and human health. Batteries should be collected separately for recycling and recycled at a local hazardous material disposal location adhering to your country and local government regulations. To find out where you can drop off your waste battery for recycling, please contact your local waste disposal service, or the product representative. The battery used in this product is marked with the European Union symbol for waste batteries to indicate the need for the separate collection and recycling of batteries.